Wilcoxon Research

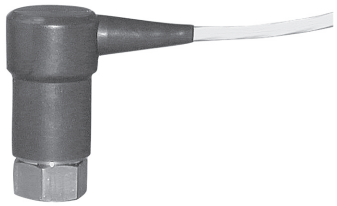

# Model 775A
# Pivoting, low cost, stud mount accelerometer

Features:
- Rugged assembly
- Hermetic seal
- ESD protection
- Reverse wiring protection
- Pivoting cable connection

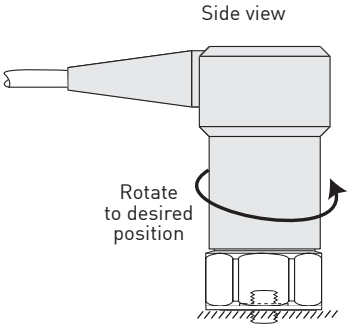


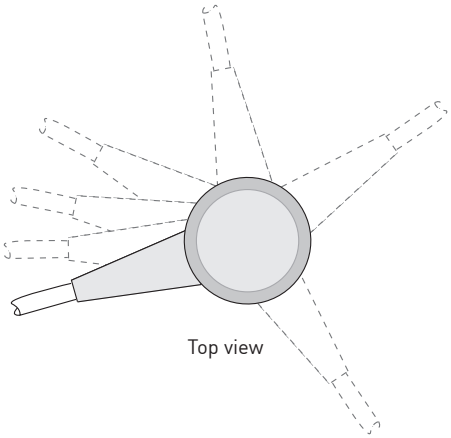


## Dynamic

| | |
|---|---|
| Sensitivity, ±20%, 25°C | 100 mV/g |
| Acceleration range | 80 g peak |
| Amplitude nonlinearity | 1% |
| Frequency response, nominal: | |
| ± 3 dB | 24 CPM - 720,000 CPM (0.4 Hz - 12,000 Hz) |
| Resonance frequency, nominal | 1,560 CPM (26 kHz) |
| Transverse sensitivity, max | 5% of axial |
| Temperature response | –50°C –7%<br>+80°C +5% |

## Electrical

| | |
|---|---|
| Power requirement: voltage source | 18 - 30 VDC |
| current regulating diode | 2 - 10 mA |
| Electrical noise, equiv. g: | |
| Broadband 2.5 Hz to 25 kHz | 700 µg |
| Output impedance, max | 100 Ω |
| Bias output voltage | 12 VDC |
| Grounding | case isolated |

## Environmental

| | |
|---|---|
| Temperature range | –50 to 80°C (–60 to 175°F) |
| Vibration limit | 500 g |
| Shock limit, min | 5,000 g |
| Sealing | hermetic |

## Physical

| | |
|---|---|
| Sensing element design | PZT ceramic / shear |
| Weight | 45 grams |
| Case material | 316L stainless steel |
| Mounting | 1/4 - 28 tapped hole |
| Cable type | J96, 16ft., blunt cut |
| Cable boot material | Viton® |

| Function | cable conductor color |
|---|---|
| Common | black |
| Power / signal | white |
| Shield | shield |

Accessories supplied: SF6 mounting stud (International customers specify mounting requirements); calibration data (level 2).
Accessories available: SF8 cementing pad.


Wilcoxon Research Inc
20511 Seneca Meadows Parkway
Germantown, MD 20876
USA

Tel: 301 330 8811
Fax: 301 330 8873
Email: wilcoxon@meggitt.com

www.meggitt.com


MEGGITT
smart engineering for
extreme environments

98761 Rev.A.3 12/07

Due to continued research and product development, Wilcoxon Research reserves the right to amend this specification without notice.