MEGGITT

Wilcoxon Research model 786A
General purpose accelerometer

Features
- Rugged design
- Corrosion resistant
- Hermetic seal
- Case isolated
- ESD protection
- Reverse wiring protection
- EMI/RFI shielded

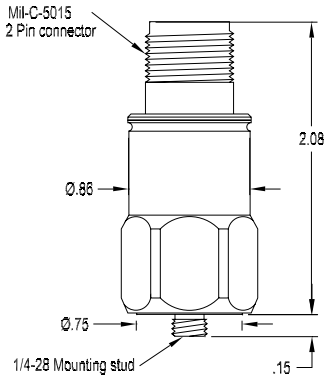

Dynamic

Sensitivity, ±5%, 25°C	100 mV/g
Acceleration range , VDC ›25V	80 g peak
Amplitude nonlinearity	1%
Frequency response:	
± 5%	3 - 5,000 Hz
±10%	1 - 9,000 Hz
± 3 dB	0.5 - 14,000 Hz
Resonance frequency	30 kHz
Transverse sensitivity, max	5% of axial
Temperature response:	
–25° C	–10%
+120° C	+10%

Electrical

Power requirement: voltage source	18 - 30 VDC
current regulating diode	2 - 10 mA
Electrical noise, equiv g:	
Broadband 2.5 Hz to 25 kHz	700 µg
Spectral 10 Hz	10 µg/√Hz
100 Hz	5 µg/√Hz
1000 Hz	5 µg/√Hz
Output impedance, max	100 Ω
Bias output voltage	12 VDC
Grounding	case isolated, internally shielded

Environmental

Temperature range	–50 to 120° C
Vibration limit	500 g peak
Shock limit	5,000 g peak
Electromagnetic sensitivity, equiv g, max	70 µg/gauss
Sealing	hermetic
Base strain sensitivity, max	0.0002 g/µstrain

Physical

Sensing element design	PZT, shear
Weight	90 g
Case material	316L stainless steel
Mounting	1/4-28 UNF tapped hole
Output connector	2 pin, MIL-C-5015 style
Mating connector	R6 type
Recommended cabling	J10 / J9T2A

Connections

Function	Connector pin
ground	shell
power / signal	A
common	B

Accessories supplied: SF6 mounting stud (metric mounting available); calibration data (level 2)

Meggitt Sensing Systems
20511 Seneca Meadows Parkway
Germantown MD 20876
USA

Tel: 301 330 8811
Fax: 301 330 8873
Email: wilcoxon@meggitt.com

www.wilcoxon.com
www.meggitt.com

MEGGITT
smart engineering for extreme environments

Due to continued research and product development, Meggitt Sensing Systems reserves the right to amend this specification without notice.
This document is cleared for public release.

98692 Rev.C.2 10/11