Wilcoxon Research

Model 793L
Low frequency accelerometer

Features
- High sensitivity
- Ultra low-noise electronics for clear signals at very low vibration levels
- Low pass filtered to attenuate high frequencies
- Hermetic seal
- ESD protection
- Reverse wiring protection

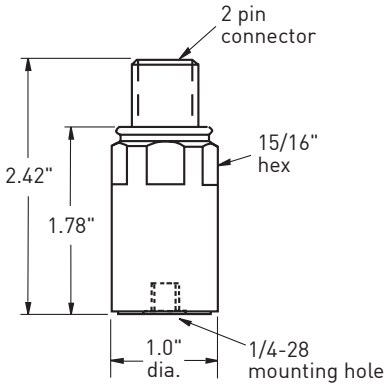

Dynamic

Sensitivity, ±5%, 25°C	500 mV/g
Acceleration range	10 g peak
Amplitude nonlinearity	1%
Frequency response:	
–5%	0.6 - 700 Hz
–10%	0.4 - 1,000 Hz
–3 dB	0.2 - 2,300 Hz
Resonance frequency	15 kHz
Transverse sensitivity, max.	5% of axial
Temperature response:	
–50°C	–10%
+120°C	+10%

Electrical

Power requirements:	voltage source	18 - 30 VDC
	current regulating diode	2 - 10 mA
Electrical noise, equiv. g:		
Broadband	2.5 Hz to 25 kHz	8.0 µg
Spectral	2 Hz	2.0 µg/√Hz
	10 Hz	0.4 µg/√Hz
	100 Hz	0.2 µg/√Hz
Output impedance, max.		100Ω
Bias output voltage		10 VDC
Grounding		case isolated, internally shielded

Environmental

Temperature range	–50 to 120°C
Vibration limit	250 g peak
Shock limit	5,000 g peak
Electromagnetic sensitivity, equiv. g.	20 µg/gauss
Sealing	hermetic
Base strain sensitivity	0.0001 g/µstrain

Physical

Sensing element design	PZT ceramic / compression
Weight	142 grams
Case material	316L stainless steel
Mounting	1/4-28 tapped hole
Output connector	2 pin, MIL-C-5015 style
Mating connector	R6 type
Recommended cabling	J9T2A

Connector pin	Function
Shell	ground
A	power/ signal
B	common

Accessories supplied: SF6 mounting stud (International customers specify mounting requirements); calibration data (level 3)
Options: Temperature sensor, intrinsic safety certification (consult factory)

Wilcoxon Research Inc
20511 Seneca Meadows Parkway
Germantown, MD 20876
USA

Tel: 301 330 8811
Fax: 301 330 8873
Email: wilcoxon@meggitt.com

www.meggitt.com

MEGGITT
smart engineering for extreme environments

98191 Rev.G.3 12/07

Due to continued research and product development, Wilcoxon Research reserves the right to amend this specification without notice.