MEGGITT
smart engineering for extreme environments

TQ 403 / EA 403 / IQS 450

Proximity measuring system

FEATURES

- From the Vibro-Meter® product line
- Non-contact measurement system based on eddy current principle
- Certified for use in potentially explosive atmospheres
- 5 m and 10 m systems
- Temperature compensated system
- Voltage or current output with protection against short circuits
- Frequency response:
  DC to 20 kHz (−3 dB)
- Measuring range:
  12 mm
- Temperature range:
  −40 to +180 °C

TQ 403

IQS 450

IECEx

DESCRIPTION

This proximity system allows contactless measurement of the relative displacement of moving machine elements. It is particularly suitable for measuring the axial position of rotating machine shafts, such as those found in steam, gas and hydraulic turbines, as well as in alternators, turbo-compressors and pumps.

The system is based around a TQ 403 non-contact transducer and an IQS 450 signal conditioner. Together, these form a calibrated proximity system in which each component is interchangeable. The system outputs a voltage or current proportional to the distance between the transducer tip and the target, such as a machine shaft.

Information contained in this document may be subject to Export Control Regulations of the European Union, USA or other countries. Each recipient of this document is responsible for ensuring that transfer or use of any information contained in this document complies with all relevant Export Control Regulations. ECN N/A.

DESCRIPTION *(continued)*

The active part of the transducer is a coil of wire that is moulded inside the tip of the device, made of Torlon® (polyamide-imide). The transducer body is made of stainless steel. The target material must, in all cases, be metallic.

The transducer body is available only with metric thread. The TQ 403 has an integral coaxial cable, terminated with a self-locking miniature coaxial connector. Various cable lengths (integral and extension) can be ordered.

The IQS 450 signal conditioner contains a high-frequency modulator/demodulator that supplies a driving signal to the transducer. This generates the necessary electromagnetic field used to measure the gap. The conditioner circuitry is made of high-quality components and is mounted in an aluminium extrusion.

The TQ 403 transducer can be matched with a single EA 403 extension cable to effectively lengthen the front-end. extension cable to effectively lengthen the front-end. Optional housings, junction boxes and interconnection protectors are available for the mechanical and environmental protection of the connection between the integral and extension cables.

The proximity system can be powered by associated signal processing modules (for example, VM600 cards) or a rack power supply.

SPECIFICATIONS

Overall proximity system

Operation

Sensitivity
- *Ordering option B31* : 1.33 mV/µm (34 mV/mil)
- *Ordering option B32* : 0.417 µA/µm (10.6 µA/mil)

Linear measuring range (typical)
- *Ordering option B31* : 0.75 to 12.75 mm, corresponding to a −1.6 to −17.6 V output
- *Ordering option B32* : 0.75 to 12.75 mm, corresponding to a −15.5 to −20.5 mA output

Linearity : See Performance curves on page 4

Frequency response : DC to 20 kHz (−3 dB)

Interchangeability of elements : All components in system are interchangeable

Environmental – explosive atmospheres

Available in Ex approved versions for use in hazardous locations

Type of protection Ex i: intrinsic safety (**ordering option A2**)		
Europe	EC type examination certificate	LCIE 11 ATEX 3091 X II 1G (Zones 0, 1, 2) Ex ia IIC T6 … T3 Ga
International	IECEx certificate of conformity	IECEx LCI 11.0061X Ex ia IIC T6 … T3 Ga
North America	cCSAus certificate of compliance	1514309 Class I, Divisions 1 and 2, Groups A, B, C and D Ex ia

⚠ **For specific parameters of the mode of protection concerned and special conditions for safe use, please refer to the Ex certificates that are available from Meggitt SA on demand.**

© Meggitt SA / 265-063 / Version 7 / 04.03.2015 / E

SPECIFICATIONS *(continued)*

Type of protection Ex nA: non-sparking (**ordering option A3**)		
Europe	Voluntary type examination certificate	LCIE 11 ATEX 1010 X II 3G (Zone 2) Ex nA II T6 … T3 Gc
International	IECEx certificate of conformity	IECEx LCI 11.0063X Ex nA II T6 … T3 Gc
North America	cCSAus certificate of compliance	1514309 Class I, Division 2, Groups A, B, C, D

⚠ **When using protection mode 'nA' (non-sparking), the user shall ensure that the signal conditioner is installed in an enclosure that ensures a protection rating of at least IP54 (or equivalent).**

⚠ **For specific parameters of the mode of protection concerned and special conditions for safe use, please refer to the Ex certificates that are available from Meggitt SA on demand.**

System calibration

Calibration temperature : +23°C ±5°C

Target material : VCL 140 steel (1.7225)

Note: If special calibration is required, please define the alloy precisely or supply a sample of alloy (min. Ø60 mm / 1 cm thick) according to Meggitt Sensing Systems' drawing number PZ 7009/1.

Total system length

The total system length (TSL) is the sum of the length of the TQ 4xx transducer's integral cable and the length of the EA 40x extension cable. The supported TSLs can be obtained from different combinations of cables.

Total system lengths

- 5 m : 1.0 m integral cable + 4.0 m extension cable
  5.0 m integral cable with no extension cable
- 10 m : 1.0 m integral cable + 9.0 m extension cable
  5.0 m integral cable + 5.0 m extension cable
  10.0 m integral cable with no extension cable

The combination of cables selected for a particular total system length depends on the application. For example, to obtain the optimum location for the separation between the integral and extension cables or to eliminate the requirement for an extension cable.

Total system length trimming

Due to the characteristics of the coaxial cable, an "electrical trimming" of the nominal length of extension cables is necessary to optimize the system performance and the transducer interchangeability.

TSL for a 5 m measuring chain : 4.4 m minimum

TSL for a 10 m measuring chain : 8.8 m minimum

SPECIFICATIONS *(continued)*

Performance curves for TQ 403 with IQS 450

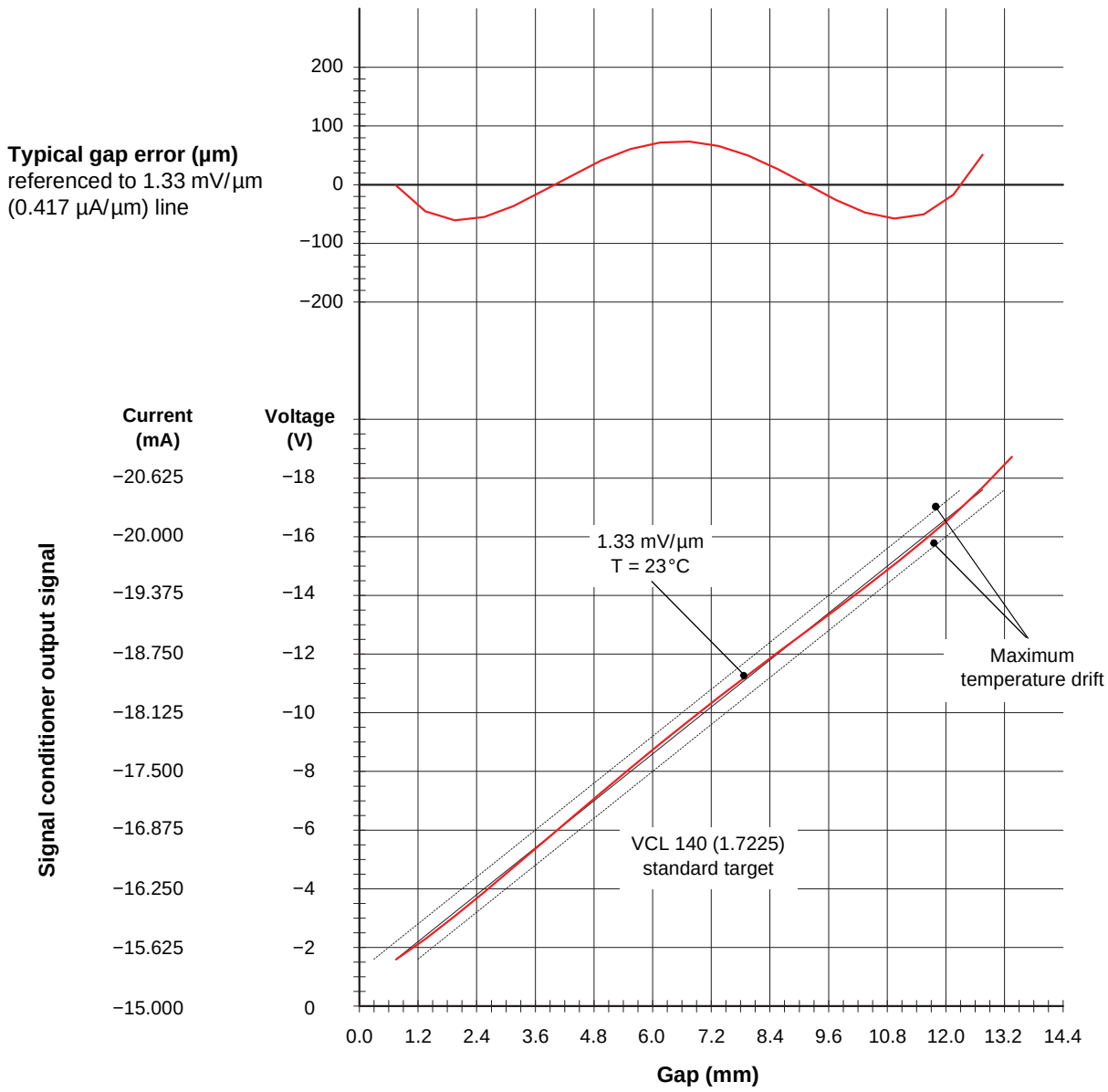

Proximity transducer:	TQ 403
Signal conditioner:	IQS 450
Standard target material:	VCL 140 (1.7225)
Equivalent materials:	A 37.11 (1.0065), AFNOR 40 CD4, AISI 4140

© Meggitt SA / 265-063 / Version 7 / 04.03.2015 / E

SPECIFICATIONS *(continued)*

TQ 403 proximity transducer and EA 403 extension cable

General

Transducer input requirements	: High-frequency power source from an IQS 450 signal conditioner

Environmental

Temperature ranges	
• *Transducer*	: −40 to +180 °C with drift < 5% (operating). +180 to +220 °C with drift > 5% (short-term survival).
• *Transducer and cable*	: **−40 to +195 °C if used in an Ex Zone**
• *Cable, connector and optional protection*	: −40 to +200 °C
Protection rating (according to IEC 60529)	: The head of the proximity transducer (transducer tip and integral cable) is rated IP68
Vibration (according to IEC 60068-2-26)	: 5 g peak between 10 and 500 Hz
Shock acceleration (according to IEC 60068-2-27)	: 15 g peak (half sine-wave, 11 ms duration)

Physical characteristics

Transducer construction	: Wire coil Ø18 mm, Torlon (polyamide-imide) tip, encapsulated in MAZ (1.4305) stainless steel body with high-temperature epoxy glue
Integral and extension cables	: FEP covered 70 Ω coaxial cable, Ø3.6 mm
Connectors	: Self-locking miniature coaxial connectors. Note: When connecting, these should be hand-tightened until locked.
Optional protection	
• *Flexible stainless steel hose (protection tube)*	: The stainless steel hose provides additional mechanical protection but is not leak-tight.
• *FEP sheath (extruded fluorinated ethylene propylene)*	: The FEP sheath provides resistance to almost all chemicals and low permeability to liquids, gases and moisture. It is also flexible, low friction and mechanically tough.

SPECIFICATIONS *(continued)*

IQS 450 signal conditioner

Output

Voltage output, 3-wire configuration	
• *Voltage at min. gap*	: −1.6 V
• *Voltage at max. gap*	: −17.6 V
• *Dynamic range*	: 16 V
• *Output impedance*	: 500 Ω
• *Short-circuit current*	: 45 mA
Current output, 2-wire configuration	
• *Current at min. gap*	: −15.5 mA
• *Current at max. gap*	: −20.5 mA
• *Dynamic range*	: 5 mA
Output capacitance	: 1 nF
Output inductance	: 100 µH

Supply

Voltage output, 3-wire configuration	
• *Voltage*	: −20 to −32 V*
• *Current*	: −13 mA ±1 mA (−25 mA max.)
Current output, 2-wire configuration	
• *Voltage*	: −20 to −32 V*
• *Current*	: −15.5 to −20.5 mA
Supply input capacitance	: 1 nF
Supply input inductance	: 100 µH

Environmental

Temperature ranges	
• *Operating*	: −35 to +85 °C*
• *Storage*	: −40 to +85 °C
Humidity	: Max. 95% non condensing. 100% condensing (not submerged).
Protection rating (according to IEC 60529)	: IP40
Vibration (according to IEC 60068-2-26)	: 2 g peak between 10 and 55 Hz
Shock acceleration (according to IEC 60068-2-27)	: 15 g peak (half sine-wave, 11 ms duration)

Physical characteristics

Construction material	: Injection moulded aluminium
Mounting	: Two or four M4 screws
Dimensions	: See Mechanical drawings and ordering information on page 10

*See Thermal considerations on page 7.

© Meggitt SA / 265-063 / Version 7 / 04.03.2015 / E

SPECIFICATIONS *(continued)*

Electrical connections

Input	: Self-locking miniature coaxial connector (female). Note: When connecting, this should be hand-tightened, until locked.
Output and power	: Three screw terminals – wire section 2.5 mm^2 (max.)

Weight

Standard version	: 140 g (approx.)
Ex version	: 220 g (approx.)

Signal conditioner with MA 130 mounting adaptor (ordering option I1)

Universal DIN rail holder type	: TSH 35
DIN rail type (according to EN 50022 / IEC 60715)	: TH 35-7.5 or TH 35-15

Thermal considerations

The IQS 450 signal conditioner will operate at ambient temperatures as high as 85 °C, but to do so, it requires derating of the maximum input voltage. The IQS 450 must operate between the minimum supply voltage and the maximum supply voltage, as shown on the following graph.

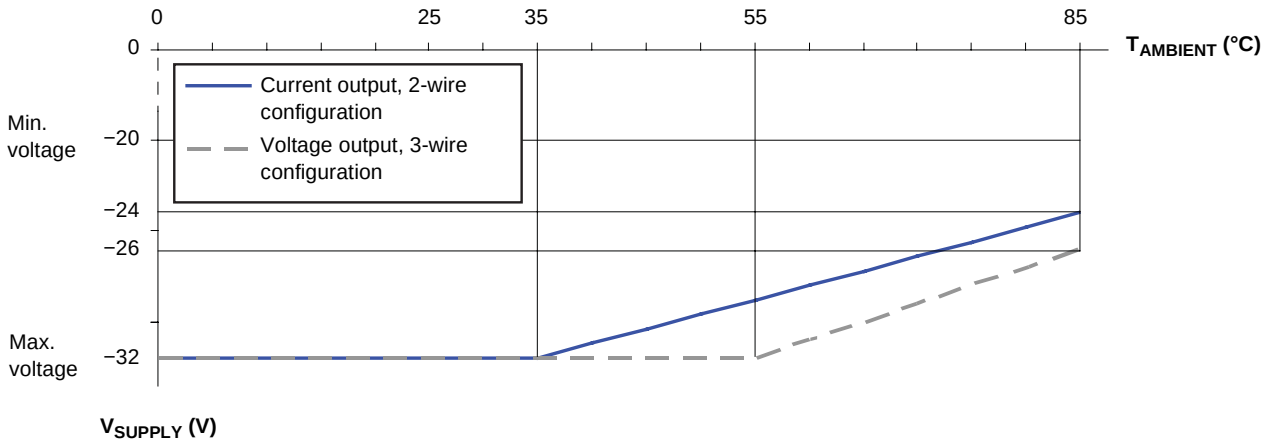

MECHANICAL DRAWINGS AND ORDERING INFORMATION

TQ 403 proximity transducer

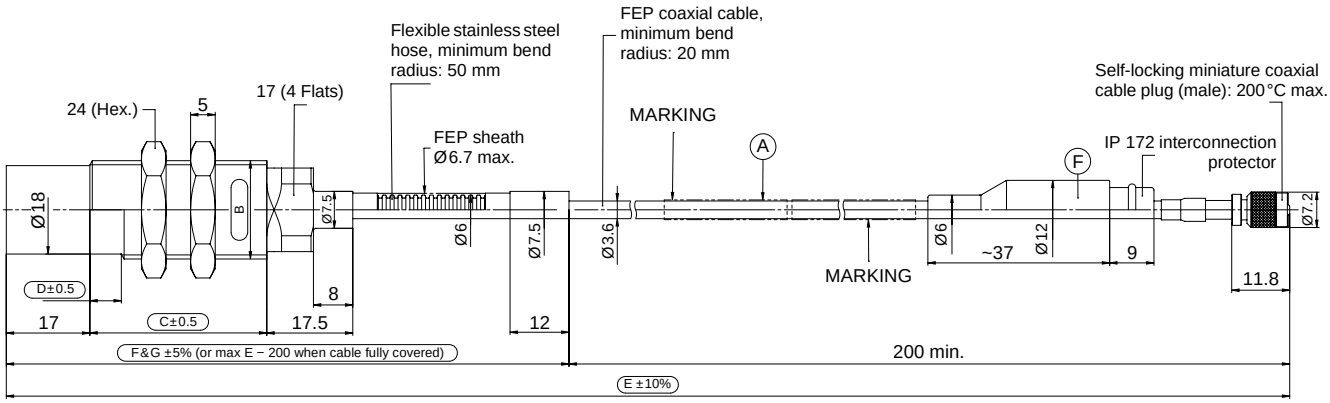

Ordering number:

111 - 403 - 000 - 013 — A — B 1 — C — D — E — F — G — H

Environment (A)	
Standard	1
Explosive Ex i	2
Explosive Ex nA	3

Body thread (B)	
M20 x 1.5	1

Body length (C)	
36 mm	036
50 mm	050
86 mm	086

Unthreaded length (D)	
Each 1 mm, from 0 to 66 m	
0 mm min.	000
66 mm max.	066

Integral cable length (E)	
1 m ±100 mm	010
5 m ±500 mm	050
10 m ±1000 mm	100

Optional protection (F) See note 1		
Cable	**Connector**	
None	None	0
Flexible hose	None	1
Flexible hose with FEP sheath	None	2
Movable flexible hose	None	3
Movable flexible hose with FEP sheath	None	4
None	IP 172	5
Flexible hose	IP 172	6
Flexible hose with FEP sheath	IP 172	7
Movable flexible hose	IP 172	8
Movable flexible hose with FEP sheath	IP 172	9

Flexible hose length (G) See note 1	
Each 0.1 m, from 0 to 9.8 m. G min. = C + 100 mm.	
None	000
0.1 m min.	001
9.8 m max.	098

Total system length (H) See note 2	
5 m	05
10 m	10

Notes
All dimensions are in mm unless otherwise stated.
1. When optional protection such as a flexible stainless steel hose with or without an FEP sheath is ordered:
   Flexible hose length (G) min. = Body length (C) + 100 mm.
   Flexible hose length (G) max. = Integral cable length (E) − 200 mm, for an integral cable that is protected to the maximum extent possible (“cable fully covered”).
2. The Total system length (H) = Integral cable length (E) + EA 403 extension cable length.
   For information on combining integral and extension cables to obtain a particular total system length, see Total system length on page 3. For information on cable length tolerances, see Total system length trimming on page 3.

© Meggitt SA / 265-063 / Version 7 / 04.03.2015 / E

MECHANICAL DRAWINGS AND ORDERING INFORMATION *(continued)*

EA 403 extension cable

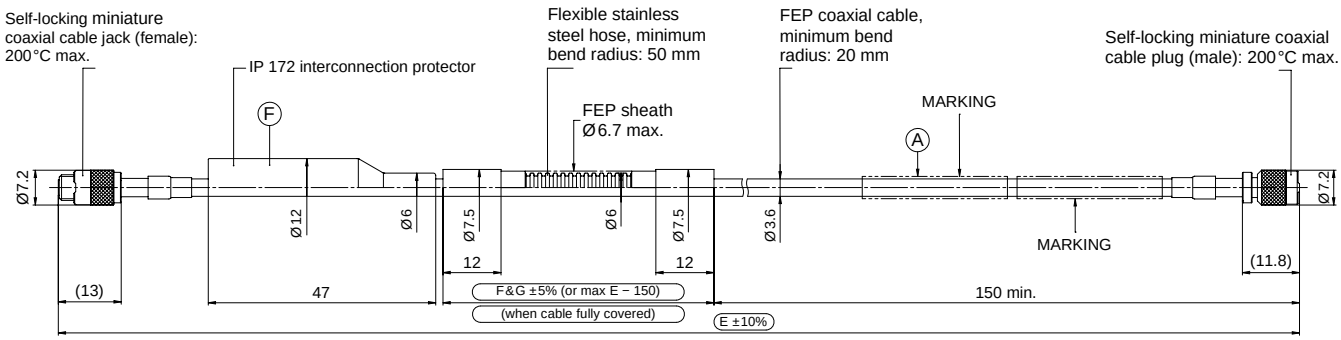

Ordering number: 913 - 403 - 000 - 013 - A - E - F - G

Environment (A)	
Standard	1
Explosive Ex i	2
Explosive Ex nA	3

Extension cable length (E) See note 1	
4.0 m ±400 mm	040
5.0 m ±500 mm	050
9.0 m ±900 mm	090

Optional protection (F) See note 2		
Cable	**Connector**	
None	None	0
Flexible hose	None	1
Flexible hose with FEP sheath	None	2
None	IP 172	5
Flexible hose	IP 172	6
Flexible hose with FEP sheath	IP 172	7

Flexible hose length (G)	
	Each 0.1 m, from 0 to 8.8 m
000	None
001	0.1 m min.
088	8.8 m max.

Notes
All dimensions are in mm unless otherwise stated.
1. The total system length = TQ 403 integral cable length + Extension cable length (E).
   For information on combining integral and extension cables to obtain a particular total system length, see Total system length on page 3.
   For information on cable length tolerances, see Total system length trimming on page 3.
2. When optional protection such as a flexible stainless steel hose with or without an FEP sheath is ordered:
   Flexible hose length (G) max. = Extension cable length (E) − 150 mm, for an extension cable that is protected to the maximum extent possible (“cable fully covered”).

MECHANICAL DRAWINGS AND ORDERING INFORMATION *(continued)*

IQS 450 signal conditioner

Signal conditioner only (ordering option I0)

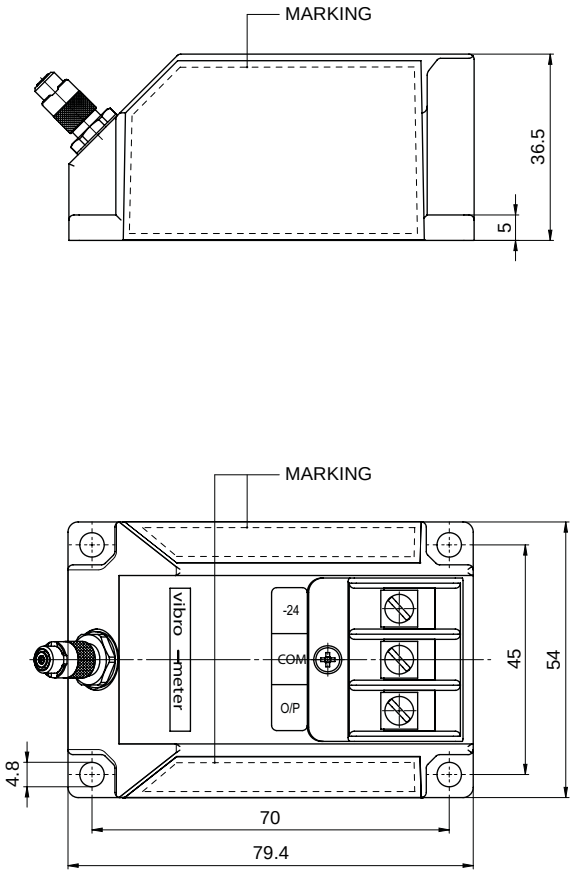

Signal conditioner with MA 130 mounting adaptor (ordering option I1)

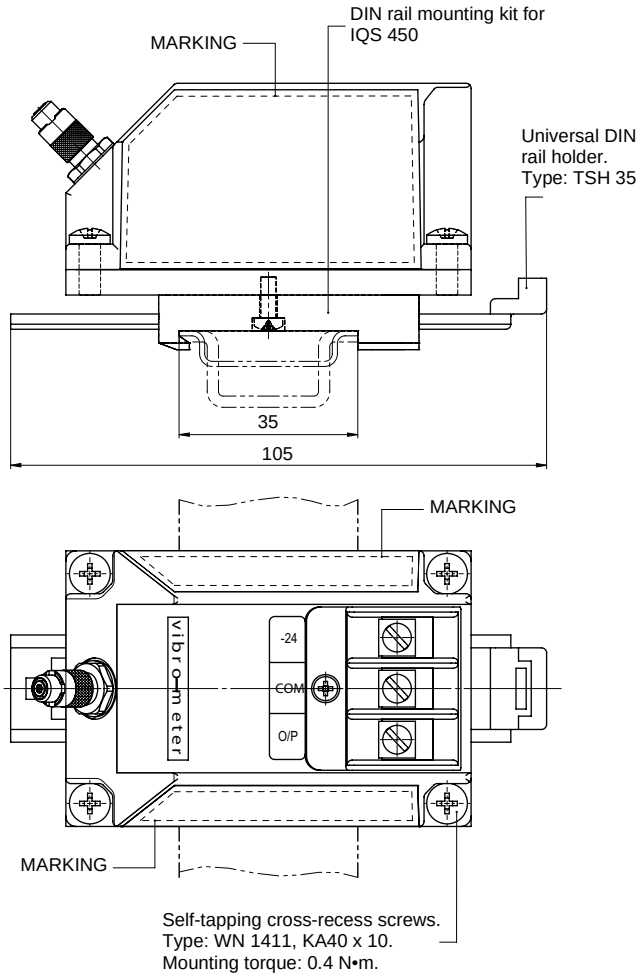

Note: All dimensions are in mm unless otherwise stated.

Ordering number: 204 - 450 - 000 - 002 - A B H I

Environment (A)	
Standard	1
Explosive Ex i	2
Explosive Ex nA	3

	Installation (I)
0	Signal conditioner only
1	Signal conditioner assembled on MA 130 mounting adaptor

Measuring range	Sensitivity (B)	
12 mm	1.33 mV/µm	31
	0.417 µA/µm	32

	Total system length (H)
05	5 m
10	10 m

© Meggitt SA / 265-063 / Version 7 / 04.03.2015 / E

MOUNTING ACCESSORIES

ABA 15x	Industrial housings	: Refer to corresponding data sheets
ABA 17x	Industrial housings	: Refer to corresponding data sheets
IP 172	Interconnection protection	: Refer to corresponding data sheet
JB 118	Junction box	: Refer to corresponding data sheet
KS 107	Flexible conduit	: Refer to corresponding data sheet
MA 130	Mounting adaptor	: See below
SG 1xx	Cable feedthroughs	: Refer to corresponding data sheets

MA 130 mounting adaptor

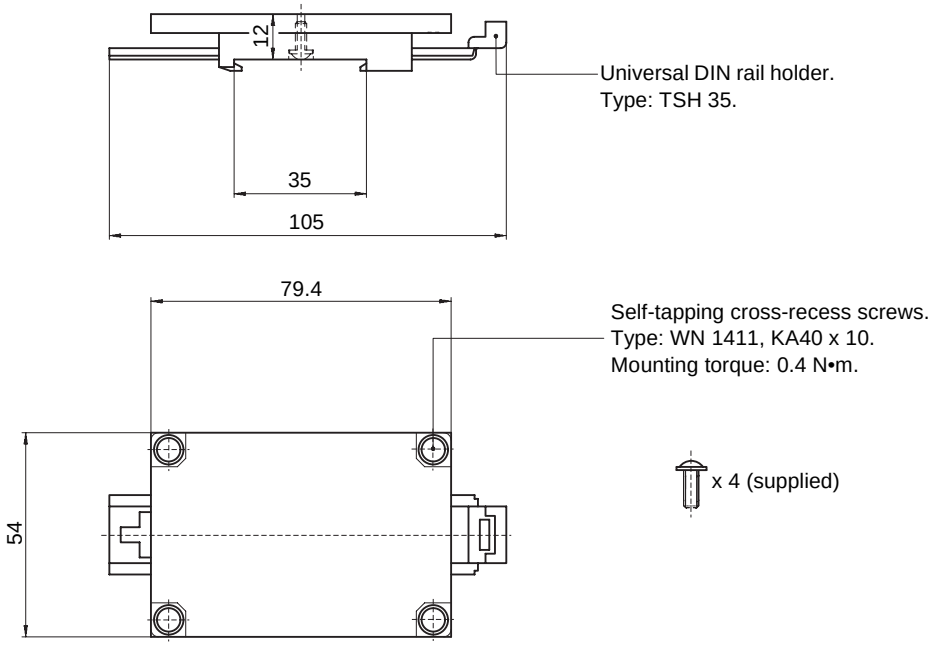

Note: All dimensions are in mm unless otherwise stated.

Ordering number: 809-130-000-011

Headquartered in the UK, Meggitt PLC is a global engineering group specializing in extreme environment components and smart sub-systems for aerospace, defence and energy markets.

Meggitt Sensing Systems is the operating division of Meggitt specializing in sensing and monitoring systems, which has operated through its antecedents since 1927 under the names of ECET, Endevco, Ferroperm Piezoceramics, Lodge Ignition, Sensorex, Vibro-Meter and Wilcoxon Research. Today, these operations are integrated under one strategic business unit called Meggitt Sensing Systems, headquartered in Switzerland and providing complete systems, using these renowned brands, from a single supply base.

The Meggitt Sensing Systems facility in Fribourg, Switzerland was formerly known as Vibro-Meter SA, but is now Meggitt SA. This site produces a wide range of vibration and dynamic pressure sensors capable of operation in extreme environments, leading-edge microwave sensors, electronics monitoring systems and innovative software for aerospace and land-based turbo-machinery.

All statements, technical information, drawings, performance rates and descriptions in this document, whilst stated in good faith, are issued for the sole purpose of giving an approximate indication of the products described in them, and are not binding on Meggitt SA unless expressly agreed in writing. Before acquiring this product, you must evaluate it and determine if it is suitable for your intended application. Unless otherwise expressly agreed in writing with Meggitt SA, you assume all risks and liability associated with its use. Any recommendations and advice given without charge, whilst given in good faith, are not binding on Meggitt SA.

Meggitt Sensing Systems takes no responsibility for any statements related to the product which are not contained in a current Meggitt Sensing Systems publication, nor for any statements contained in extracts, summaries, translations or any other documents not authored by Meggitt Sensing Systems. We reserve the right to alter any part of this publication without prior notice.

In this publication, a dot (.) is used as the decimal separator and thousands are separated by thin spaces. Example: 12345.67890.

Sales offices

Meggitt Sensing Systems has offices in more than 30 countries. For a complete list, please visit our website.

ISO 9001
FS 584089

ISO 14001
BUREAU VERITAS
Certification

Your local agent

Head office

Meggitt SA
Route de Moncor 4
PO Box 1616
CH - 1701 Fribourg
Switzerland

Tel: +41 26 407 11 11
Fax: +41 26 407 13 01

www.meggittsensingsystems.com
www.vibro-meter.com

© Meggitt SA / 265-063 / Version 7 / 04.03.2015 / E